## EXAMPLE 4.1

A particle of 20 kg mass is subjected to the shown two forces and moves along a straight line on rough horizontal surface for which the coefficient of kinetic friction $\mu_k = 0.25$. When s = 1 m, the velocity of the particle is $v_0 = 2$ m/s, determine the velocity of the particle when s = 3 m.

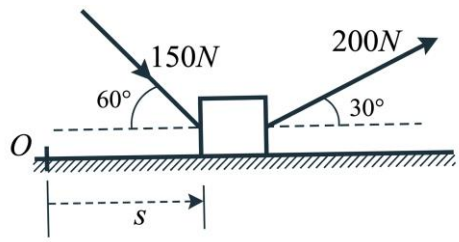


### SOLUTION

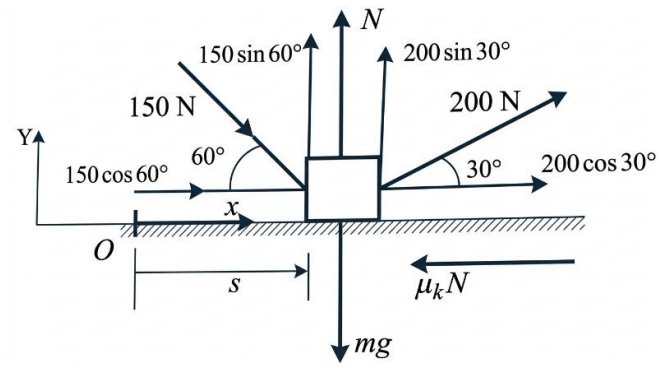


Draw the free-body diagram and resolve the inclined forces.

$\sum F_y = 0$

$N + 200sin30° - 150sin60° - mg = 0$

$N = 226.1\ N$

$U_{1\to2} = 200cos30° \times 2 + 150cos60° \times 2 - \mu_k N \times 2$

$U_{1\to2} = 346.41 + 150 - 0.25 \times 226.1 \times 2 = 383.36\ J$

Substituting into the work and energy equation, we get:

$\frac{1}{2}m{v_2}^2 = U_{1\to2} + \frac{1}{2}m{v_1}^2$

$10{v_2}^2 = 383.36 + 10 \times 2^2$

$v_2 = 6.51\ m/s$

Section

**EXAMPLE 4.2**

A particle of 20 kg mass moves down a rough inclined plane for which the coefficient of kinetic friction $\mu_k = 0.5$ with an initial velocity $v_1 = 4$ m/s, determine the distance s the particle moves down the inclined plane before it stops.

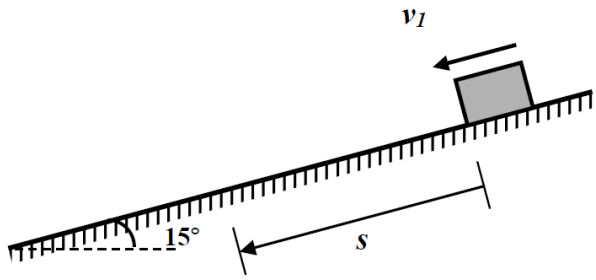


## SOLUTION

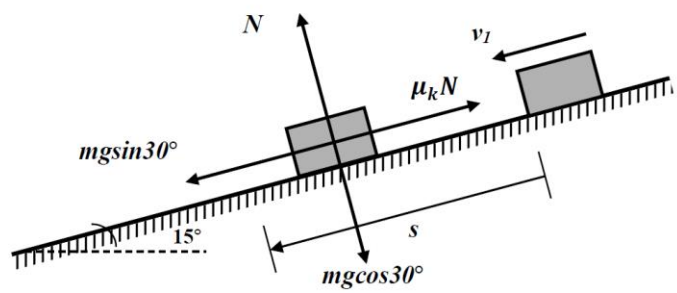


The figure indicates the free body diagram of the particle at a general position during its motion along down the inclined plane. The weight of the particle mg is resolved into two components one parallel to the plane (mgsin15°) and the other normal to it (mgcos15°).

$$\sum F_y = 0$$

$$N = mgcos15° = 20 \times 9.81cos15° = 189.51\ N$$

The final velocity $v_2$ is zero (the particle stops). Applying the principle of work and energy between the initial ($v_1 = 4$m/s) and the final position ($v_2 = 0$).

$$\frac{1}{2}m{v_2}^2 = U_{1\to 2} + \frac{1}{2}m{v_1}^2$$

$$0 = mgsin15° \times s - \mu_k N \times s + 10 \times 4^2 - 160 = (mgsin15° - \mu_k N) \times s$$

$$s = 3.64\ m$$

## EXAMPLE 4.3

A particle of 50 kg mass is moving along a rough horizontal surface for which the coefficient of kinetic friction $\mu_k = 0.25$ with an initial velocity $v_0 = 4$ m/s at the position s = 0. If the spring is stretched 0.2 m at s = 0 and the particle is subjected to a constant force P = 500 N, determine the velocity of the particle at the position s = 1 m. The spring constant k = 200 N/m.

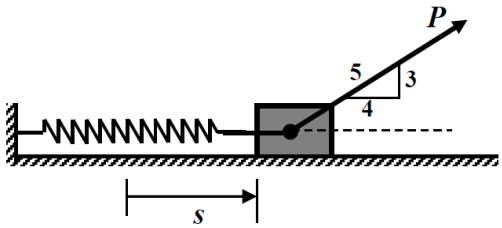


### SOLUTION

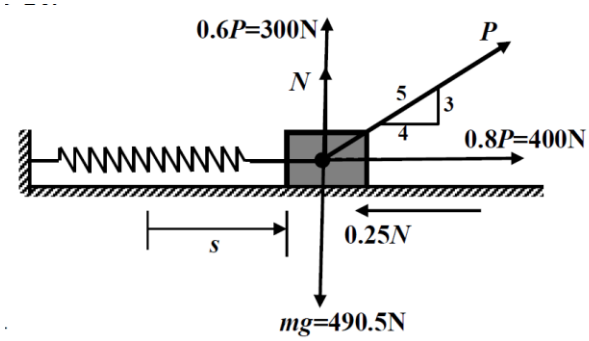


$\sum F_y = 0$

$N + 300 = 490.5$

$N = 190.5N$

$$\frac{1}{2}m{v_2}^2 = \frac{1}{2}m{v_1}^2 + U_{1\to 2}$$

$$25{v_2}^2 = 25(4)^2 + 400 \times 1 - 0.25N \times 1 - \frac{1}{2}k[{s_2}^2 - {s_1}^2]$$

$$25{v_2}^2 = 25(4)^2 + 400 - 0.25 \times 190.5 - \frac{1}{2}100[1.2^2 - 0.2^2]$$

$v_2 = 4.95\ m/s$

## EXAMPLE 4.4

The particle shown is of 10 kg mass and is moving downward along a rough inclined surface for which the coefficient of kinetic friction $\mu_k = 0.2$ with a velocity $v_1 = 10$ m/s. The particle is attached to a spring having a stiffness k = 50 N/m and is subjected to a horizontal force = 100N. The spring originally length stretched 0.1 m. If the particle is displaced a distance of 1 m down the plane, determine its velocity.

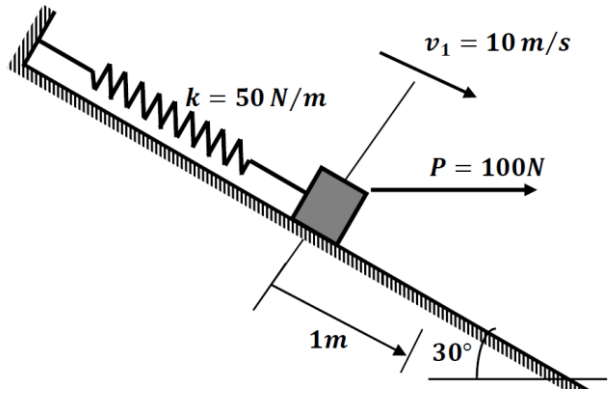


### SOLUTION

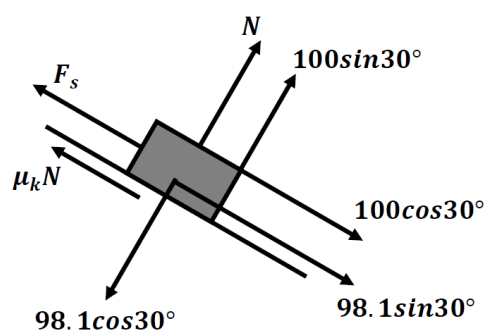


$$\frac{1}{2}mv_2{}^2 = \frac{1}{2}mv_1{}^2 + U_{1\to2}$$

$$\sum F_y = 0$$

$$N + 100sin30° = 98.1cos30°$$

$$\therefore N = 35\ N$$

$$\sum U_{1\to2} = (100cos30° + 98.1sin30° - \mu_k N) \times 1 - \frac{1}{2}k[s_2{}^2 - s_1{}^2]$$

$$5v_2{}^2 = 50(10)^2 + 86.6 + 49.05 - 0.2 \times 35 - 25[(1.1)^2 - (0.1)^2]$$

$$5v_2{}^2 = 500 + 98.65$$

$$\therefore v_2 = 10.94\ m/s$$

## PROBLEMS

**4-1** The 50 kg block is subjected to the forces shown. The block starts motion with a speed of 8 m/s over a rough plane having a coefficient of kinetic friction $\mu_k$=0.2. Determine its velocity when it moves a distance 2 m down the plane.

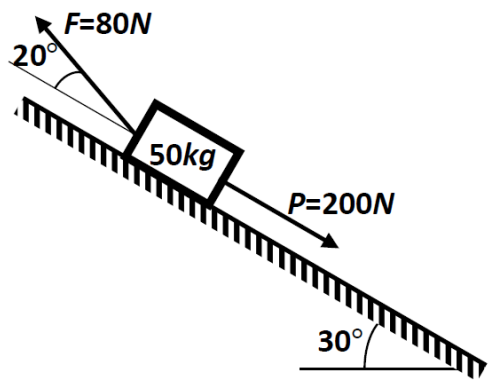


**4-2** A particle of 10 kg mass is moving along a rough horizontal surface for which the coefficient of kinetic friction $\mu_k$ = 0.4 with an initial velocity $v_0$ = 3 m/s at the position s = 0. If the spring is stretched 0.3m at s = 0 and the particle is subjected to a towing force P = 400 N, determine the velocity of the particle at the position s = 0.8 m. The spring constant k = 200 N/m.

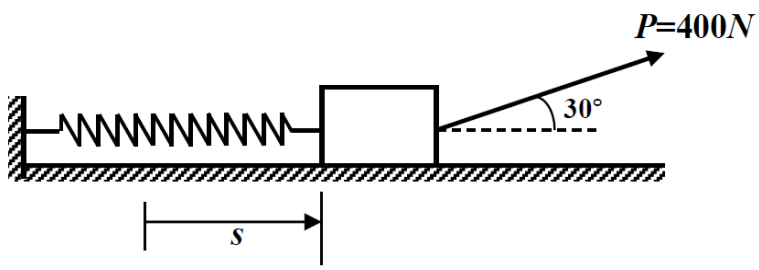


**4-3** The 2 kg block moves down a rough plane having a coefficient of kinetic friction $\mu_k$ = 0.25. The block strikes a spring having a stiffness k = 100 N/m with a velocity of 10 m/s. Determine the compression s in the spring when the block stops.

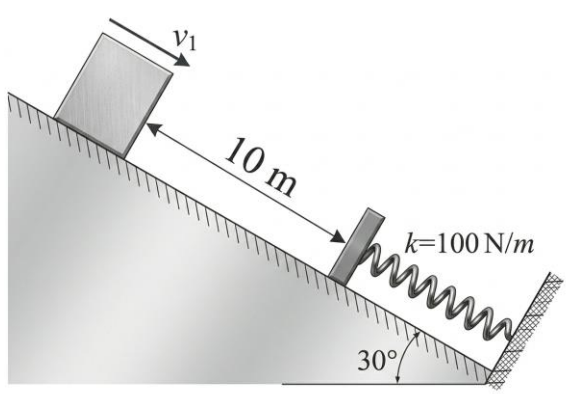
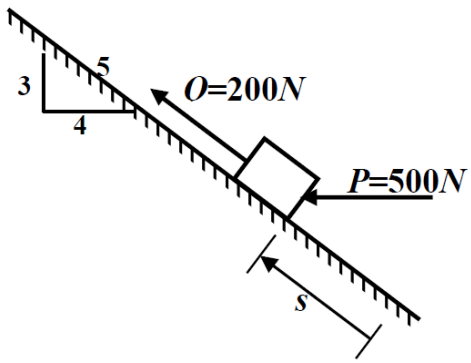
**4-4** A particle of 20 kg mass is moving along a rough inclined surface for which the coefficient of kinetic friction $\mu_k = 0.2$ with an initial velocity $v_0 = 4$ m/s at the position s = 0. If the particle is subjected to two constant forces P = 500 N and Q = 200 N as shown, determine the velocity of the particle at the position s = 3 m.